Transmission Switches

Inertia Engineering & Machine Works, Inc.
6665 Hardaway Road, Stockton CA 95215

Tel: 800-791-9997 | Fax: 209-931-8186
E-mail: sales@inertiaworks.com

Section 3 - Overhead Transmission Switches

LineBOSS™

46 kV - 69 kV (48 kV - 72.5 kV)

Sidebreak Type, Unitized GOAB

Transmission Switch

INERTIA Engineering and Machine Works, Inc. adapted the industry leading design features of its distribution class switches, to produce a high quality, cost effective, unitized sidebreak style transmission switch.

The ease of installation that unitized distribution class switches provide is now available for transmission class switches. The phase units are shipped as completely factory assembled and adjusted units. The actual configuration is delivered fully unitized or modularized for fast, simple and easy field installation.

The **LineBOSS**™ 46 kV and 69 kV sidebreak switches are the lowest "cost to own" switches available today. Fully unitized or modular switches are hung on the pole in hours, not days. These switches also provide lower operating costs. Unbalanced conductor load or seasonal temperature changes can create line sag leading to contact misalignment on other style switches. This maintenance headache is eliminated by the **LineBOSS**™ sidebreak switch. Custom phase bases are available for installation on a wide variety of structures.

STANDARD FEATURES

- Unitized or modular construction on aluminum or steel crossarms for fast and easy installations.
- Factory adjusted, ready to mount with minimal, if any, field assembly required.
- Available with silicone (std.) or porcelain insulators.
- Reverse loop, silver plated copper jaw contacts.
- Maintenance-free, sealed, stainless steel ball bearings.
- Meets all applicable NEMA and ANSI standards.
- All ferrous components are hot dip galvanized.
- Tinned copper two-hole and four-hole terminal pads
- TDG (Thermal Diffusion Galvanized) coated ferrous components available for increased corrosion resistance.

STANDARD CONFIGURATIONS

- Horizontal, Center Mount
- Vertical, Phase over phase
- Delta, Triangular/Pole Top
- Twin Circuit
- Tap Switch: 1, 2, and 3-way
- Vertical, Tiered Outboard
- Horizontal, Underarm
- In-Line Tap
- Riser Switch
- Horizontal, Pole Top
- Vertical Twin Circuit
- Avian/Wildlife Protection

SPECIFICATIONS

Voltage Class:	46 kV (48 kV max.) & 69 kV (72.5 kV max.)		
Current Class:	600, 900 and 1200 A, continuous		
Momentary current:	600 A:	40,000 A-rms,	10 cycles
		25,000 A-rms,	3 seconds
	900 A:	51,000 A-rms,	10 cycles
		32,000 A-rms,	3 seconds
	1200 A:	70,000 A-rms,	10 cycles
		44,000 A-rms,	3 seconds

Meets or Exceeds All Applicable NEMA, IEEE, ANSI, and IEC Standards

Continuous current ratings tested to IEEE C37.32-2005.

INTERRUPTER/LOADBREAK RATINGS (Maximum)

High Speed Break Ratings:

Voltage	Cable Charging	Magnetizing
46 kV	18 A-rms	18 A-rms
69 kV	15 A-rms	15 A-rms

Vacuum Bottle Interrupters	AmpVac™ V	V4	V7
Voltage Class	15.5 kV, 25 kV, 38 kV*	48.0 kV	72.5 kV
Interrupting Current	2000 A	2000 A	2000 A
Parallel Break Current	1500 A	2000 A	2000 A
Cable Charging Current	40 A	10 A	10 A
Magnetizing Current	21 A	70 A	70 A

INERTIA Engineering & Machine Works, Inc.
6665 Hardaway Road • Stockton, CA 95215
Tel: 800-791-9997 | Fax: 209-931-8186
E-mail: sales@inertiaworks.com

LineBOSS™ Selection Guide 46 kV - 69 kV (48 kV - 72.5 kV)

LineBOSS™ Selection Guide (48.0 kV - 72.5 kV)

L61SV3SC1133

LineBOSS™ Unitized Sidebreak Switch
ARMORGALV® = LT

Voltage Class: 48.0 kV (250 kV BIL) = 4
72.5 kV (350 kV BIL) = 6

Current Rating: 600 A = 6
900 A[1] = 6
900 A[2] = 9
1200 A[3] = 1

Insulator Type:
Polymeric Silicone[4] = S
Porcelain[4] = P
For Increase insulator creepage:
Add "1" for +1 voltage class

Interrupter Type:
ArcHorn = A
ArcWhip, Quick-break = Q
High Speed Whip = SH
Sectionalizer = SV
Vacuum: 15.5 - 38.0 kV = V
48 kV = V4
72.5 kV = V7
No Interrupter = X

Crossarm Type:
Galv. Steel = S
No Xarm = X
Customer specified loading (call factory).

Mounting Configuration:
Vertical (Tiered Outboard) = B
Horizontal Center Mount = C
Delta (Pole Top) = D
Horizontal Upright = H
Vertical (Inline) = L
Riser = R
Twin Circuit = T
Underarm Horizontal[6] = U
Vertical (Phase over Phase) = V
Tap Switch[7]: 1-way = 1W
2-way = 2W
3-way = 3W
Add "S" for Substation (H-Frame)[5] See Substation/H-Frame Chart.

Control Rod Length:
30 feet (standard) = 3
Specify (10' Sections) = __
See Options Chart For Insulated Section.

Control Rod Type:
Reciprocating (⇧⇩)
1 3/4" square fiberglass = 1
1" galvanized pipe = 4
Torsional (↺)
1 1/2" galvanized pipe = 6

Control Location:
Specify the quadrant by number, where the control is to be located.
See Control Options Chart.

Control Mechanism:
Reciprocating handle (⇧⇩) = 1
Torsional handle (↺) = 2
Motorized Operator = M

[1] 900 A (Temp Rise: 30°C Momentary: 40 kA)
[2] 900 A (Temp Rise: 30°C Momentary: 51 kA ANSI)
[3] 1600 A (IEEE1247 Temp. Rise)
[4] Voltage Class: 48.0 kV = 3.0" BC, 72.5 kV = 5.0" BC
[5] Substation Conifg. available only in: "CS", "HS", "RS", "US"
[6] Avian Protection.
[7] Consult Factory for Unitized Switch.

*Note: Not all configurations are possible. Some design limitations may apply. Torsional control mechanisms are not available in all configurations. Please contact us to see if your specific design configuration(s) is available.

ENG-2020 TRANSMISSION SELECTION GUIDE REV 2 RELEASE DATE: 4-29-2020

LineBOSS™ Standard Configurations

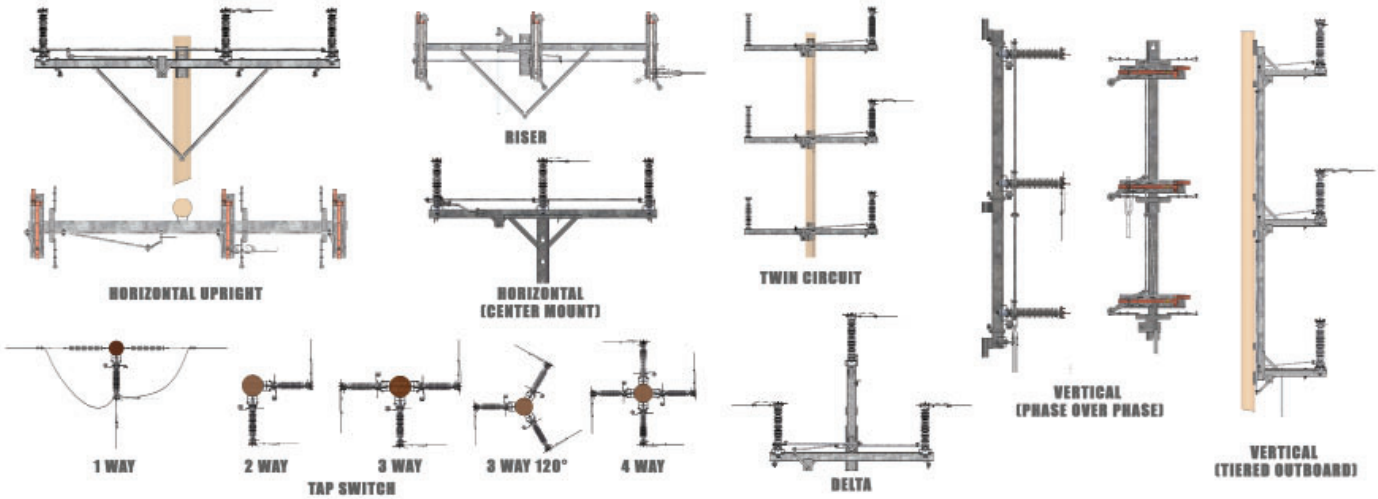

LineBOSS™

48 kV - 72.5 kV Transmission Switch

Request For Quotation

E-MAIL: sales@inertiaworks.com | FAX: (209) 931-8186

Company Name _____ Contact Name _____

Address 1 _____ Telephone Number _____

Address 2 _____ Facsimile Number _____

City _____ State Zip code _____ E-mail address _____

Make copies of this form to transmit your switch requirements. If you have your own standard's drawing, please fill out the customer information and send it with this fax form.

Step 1. Voltage Class _____kV Continuous Current Rating (ANSI)[1]: _____Amps

Step 2. Insulator Type: ☐ Silicone ☐ Porcelain

Step 3. Interrupter Type: ☐ ArcHorn ☐ ArcWhip ☐ Hi-speed Break ☐ AmpVac 'V' ☐ V4 ☐ V7

Step 4. Select Crossarm Type: ☐ Galvanized Steel ☐ Aluminum

Step 5. Select the configuration (circle one):

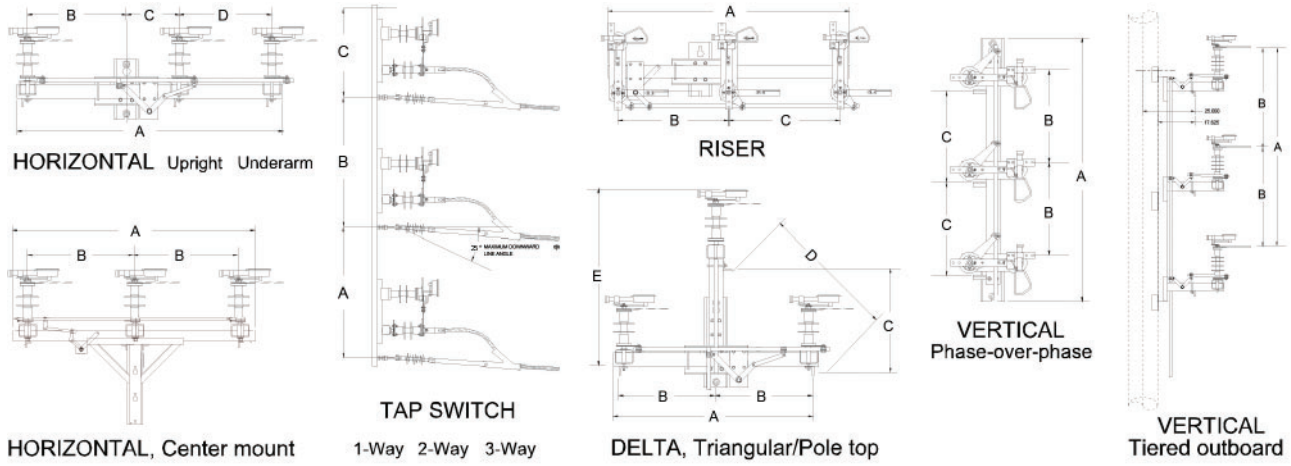

Step 6. Select Spacing:

☐ Standard ☐ Custom (Fill in Spacing Dimensions below using configurations in Step 5.)

A" _____ "B" _____ "C" _____ "D" _____ "E" _____

Step 7. Select the control mechanism:

☐ Reciprocating (⇧⇩) ☐ Torsional (↺) Clockwise or Counterclockwise to open; viewed looking down on the handle.

*Note: Torsional control mechanisms are not available in all configurations. Please contact us to see if your specific design configuration(s) is available.

Step 8. Select the control mechanism quadrant (see fig. 1): _____

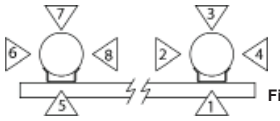

Figure 1: Control Quadrants

[1] **LineBOSS**™ switches are ANSI rated switches. The **LineBOSS**™ Lx6xxxxx is rated 600 Amps continuous current per the ANSI C37.30 temperature rise test requirements, and for 900 Amp continuous current per the IEEE 1247 temperature rise test requirements. The **LineBOSS**™ Lx9xxxxx is rated 900 Amps continuous current per the ANSI C37.30 temperature rise test requirements. The **LineBOSS**™ Lx1xxxxx is rated 1200 Amps continuous current per the ANSI C37.30 temperature rise test requirements.
Momentary current ratings (10 cycle) are: 600 A (ANSI C37.30) = 40 kA 900 A (ANSI C37.30) = 51 kA 1200 A(ANSI C37.30) = 70 kA

INERTIA Engineering & Machine Works, Inc.
6665 Hardaway Road • Stockton, CA 95215
Tel: 800-791-9997 | Fax: 209-931-8186
E-mail: sales@inertiaworks.com

Step 9. Select control rod (circle one) [2]: ☐ Galvanized pipe: 1" 1½" other_____

☐ Fiberglass: 1¾" square other_____

Step 10. Select control rod length (circle one): ☐ 30 ft. ☐ 40 ft. ☐ other_____

Step 11. Select additional accessories and modifications (check off and write in)

☐ Provision for Neutral (4-wire)

☐ Pole mounting bands

☐ Substation mounting: Specify base mounting dimensions or furnish drawing.

☐ Surge Arrestor brackets: ☐ set of 3 arrestor brackets ☐ set of 6 arrestor brackets

☐ Extension links: ☐ set of 6; each 6" long ☐ set of 6; each 14" long ☐ "Y" Ball Clevis

☐ Terminals: ☐ Terminal paddle for fired wedge connectors _____(specify size)

☐ Terminals, 2-hole copper NEMA pad #2-500 kcmil (600 & 900 A switch) Specify:_____

☐ Terminals, 4-hole copper NEMA pad 500-750 kcmil (1200 A switch) Specify: _____

☐ Terminals, other; _____(specify size)

☐ Sensor Brackets: 1 set of 3 brackets

☐ Current/Voltage Sensors (Package Qty. of 3): ☐ Current ☐ Voltage ☐ Current/Voltage

☐ Fiberglass section in pipe control rod: ☐ 1¾" square fiberglass

☐ Station post insulator in control rod section

☐ Intermediate control rod guides ☐ Swing-arm type

☐ Bonded handle ☐ Grounding connector on crossarm _____ AWG range

☐ Key Interlock - single key for circuit switching safety ("locked open")

☐ Double Lifting Point

☐ ArmorGalv® AG3000 (Thermal Diffusion Galvanizing) ferrous component coating[3].

---

[2] Torsional control rods available in 1-1/2" Galvanized Pipe Only.

[3] Ferrous components come Hot Dipped Galvanized (HDG) standard. Armorgalv AG3000 Thermal Diffusion Galvanizing (TDG) offers increased corrosion resistance.

LineBOSS™

Air-Break Disconnect Switch Attachment

Selection Information

ArcHorn

(Not an Interrupter)

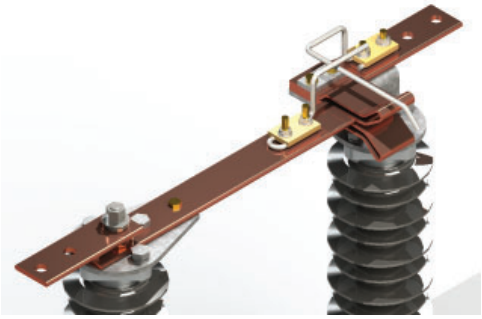

LineBOSS™ Selection Guide suffix "A"

The Arc Horn is not an interrupter and has no ratings. It is used as an arc deflecting mechanism to save the life of switch blades and contact clips. The ArcHorn, also known as "sacrificial arcing horn", is the first point of contact during switch closing operations. The initial making current during a closing operation creates small arcs; pitting the arc horns. This "sacrificial" mechanism prevents degradation of the main contacts. The Arc Horn is used to redirect the arc resulting from residual or stored charge left in a line after a down-line circuit is opened. Arc Horns will not prevent damage from the inadvertent opening of a loaded switch.

ArcWhip

LineBOSS™ Selection Guide suffix "Q"

The ArcWhip has a small interrupting rating between 10 and 20 amps. ArcWhips can clear arcs from residual energy stored in capacitor banks, transformers or conductors. ArcWhips are only in the current path during switch opening operations. Quick break whips have an average life of 150 open operations.

AmpVac™ 'V'

LineBOSS™ Selection Guide suffix "V"

The AmpVac is an enclosed vacuum bottle interrupter where no gases are vented to the atmosphere. The AmpVac interrupter has much higher interruption capabilities than other load break devices. Single contact AmpVac interrupters break loads up to 1500 amps at 35 kV. Single vacuum bottle interrupters may be used at reduced voltages for parallel or loop switching applications as long as the peak recovery voltage does not exceed 38 kV. The is rated for 5000 operations. The AmpVac was tested to IEEE 1247.

High Speed Whip

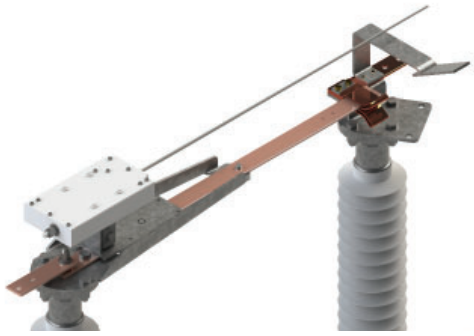

LineBOSS™ Selection Guide suffix "S"

The HSW, high speed whip (break) Interrupters are used to interrupt line charging current at system voltages up to 72.5 kV. They can also interrupt transformer magnetizing current at system voltages up to 72.5 kV. These interrupters are designed for 5000 open operations.

V4 & V7

LineBOSS™ 48 kV - 72.5 kV Selection Guide suffix "V4" and "V7"

The V4 and V7 vacuum interrupters are single-gap load-breaking devices that utilize vacuum bottle technology, where no gases are vented to the atmosphere. The new single vacuum bottle design can break loads up to 2000 Amps at 46 kV and 69 kV (48kV and 72.5 kV); where it now replaces the original V2 and V3 multi-vacuum bottle designs. Vacuum bottle interrupters are not in the current path during the switch closing operation, and have no fault closing capabilities. The V4 and V7 vacuum interrupter is rated for 5000 operations.

Sectionalizer

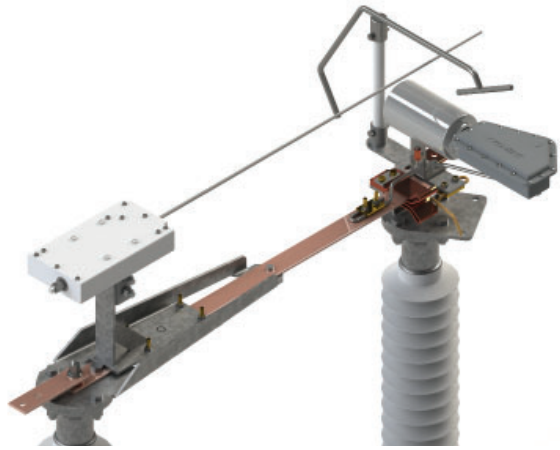

LineBOSS™ 46 kV - 69 kV Selection Guide suffix "SW"

Transmission line load sectionalizing requires moving blade gang operated switches to be able to interrupt parallel loops, line charging, and transformer magnetizing currents at system voltage levels. This is accomplished by combining the voltage interrupting capabilities of the High Speed Whip and the current interrupting capabilities of the AmpVac™ single gap vacuum interrupter.

Vacuum Bottle Interrupter Applications:

Type of Switching:	AmpVac™ 'V'	V4	V7
Voltage Rating:	15.5 kV, 25 kV, 38 kV*	48.0 kV	72.5 kV
Loadbreak, 70% PF	2000 A	2000 A	2000 A
Parallel Break < 30% PF	1500 A	2000 A	2000 A
Cable Charging	40 A	10 A	10 A
Magnetizing	21 A	70 A	70 A
* Recovery voltage between source and load must be less than 38 kV, immediately.			

Interrupter Attachment Device Application:

Type of Switching:	ArcHorn	ArcWhip		High Speed Whip	
Voltage Rating:	N/A	48.0 kV	72.5 kV	48.0 kV	72.5 kV
Cable Charging	N/A	15 A-rms	5 A-rms	25 A-rms	20 A-rms
Line Charging	N/A	3500kVA	3500 kVA	70 MVA	70 MVA
Magnetizing	N/A	N/A	N/A	N/A	N/A

LineBOSS™

46 kV & 69 kV (48 kV & 72.5 kV), 600 - 1200 A
Sidebreak Style Switch

Features and Benefits

Inertia's unitized transmission switches install with the speed and ease of distribution switches and provide years of maintenance-free operation. Featuring the lowest installed, lowest operating cost switch comprised of quality components to ensure longer service-life.

FEATURES	BENEFITS
 **Unitized/Modular Switches**	The **LineBOSS**™ 46 kV and 69 kV switches come from the factory with each phase unit completely unitized and adjusted. When the switch configuration calls for partial assembly, the LBS switch is broken down into easily assembled modules. The locations of the modules are fixed, requiring very little, if any, adjustment. Benefit: Greatly reduced installed cost with minimal field assembly and adjustment of the switch.
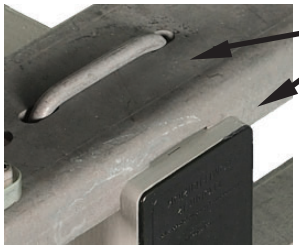 **Interlocking phase base design with through-hole mounting bolts.**	The LBS 46 kV and 69 kV phase units have an interlocking design that securely clamps and locates each phase unit on the crossarm. Secure phase bases result in minimal movement over the life of the switch. Adjustments to the switch are virtually eliminated. The through-bolt fastening assures that user specified phase spacing is met without additional field measurements or adjustments. Benefit: Reduced installed cost due to minimal assembly Reduced maintenance cost through secure clamping
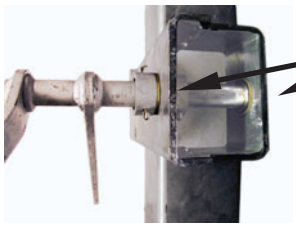 **Stainless steel/ brass bearings in the bellcrank**	Bearings in the bellcrank mechanism reduce the force required to operate the switch and eliminate corrosion caused by plated metal-to-metal abrasion and wear. Benefit: The ease of operation reduces risk of injury to personnel operating the switch and also translates into greater switch life.
 **Busbar grade copper contact components.**	Inertia uses busbar grade copper contact components as they are structurally and electrically superior to cast contact materials. Cast aluminum and copper bronze contact castings are 34-36% conductive and often contain unseen surface irregularities and voids that create 'hot spots'. Busbar grade C110 copper is 99% conductive and is many times smoother to provide better connection surfaces and is not subject to porosity. Benefit: Reduced operating cost due to a cooler running switch. Longer service life with reduced energy loss.
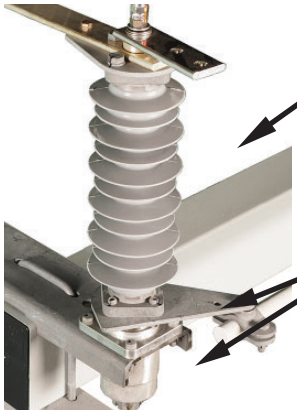 **ANSI TR2xx series, 3" (48kV) & 5"(72.5kV) bolt circle station post insulators are provided in silicone or porcelain.** **Sealed stainless steel ball bearings on rotating stacks**	The LBS switches are offered with silicone or porcelain, three inch (3") and five inch (5") bolt circle station post insulators. Silicone insulators are standard, with porcelain available as a lower cost alternate. Benefit: Silicone insulated switches are lighter and easier to install with minimal chance of damage when un-crating and erecting. Porcelain insulators provide a lower cost option. The rotating insulators pivot on double sealed stainless steel ball bearings at both the top and bottom of the phase base providing smooth maintenance-free operation of the switch throughout its life. Benefit: Total operating cost of the switch is reduced as less site visits are required for maintenance.

INERTIA Engineering & Machine Works, Inc.
6665 Hardaway Road • Stockton, CA 95215
Tel: 800-791-9997 | Fax: 209-931-8186
E-mail: sales@inertiaworks.com

LineBOSS™

46 kV & 69 kV (48 kV & 72.5 kV) 600, 900 & 1200 A Switches

Specification Elements

Part Description:

46 kV (48.0kV max.) or 69 kV (72.5 kV max.) GANG OPERATED LOADBREAK OVERHEAD SWITCHES
Horizontal Upright | Horizontal Center Mount | Horizontal Underarm | Vertical (Phase-over-phase) | Vertical (Twin Circuit) Vertical (Inline) | Riser | Delta (Pole Top) | Twin Circuit | Tiered Outboard | Tap (1, 2, 3 way)

Design Specifications:

1. Nominal voltage: 48 kV or 72.5 kV (46 kV or 69 kV), continuous current rating: (600 A, 900 A or 1200 A)
2. Insulators: Silicone rubber station post, BIL rating: 48 kV: 250 kV BIL, 72.5 kV: 350 kV BIL
3. Switch bearings: Sealed stainless steel ball bearings on all rotating insulators.
4. Contacts: Silver-plated copper busbar blades with reverse loop contacts. N.E.M.A. terminal pads shall be tin-plated copper busbar. Cast alloys are not acceptable for current path components.
5. The switch shall provide means to attach line current/voltage sensors.
6. All ferrous components shall be hot dip galvanized.
7. Loadbreak shall be self-resetting; where the tripping speed of the loadbreak is independent of the switch operating speed.
8. Switch base (crossarm) is to be hot dipped galvanized steel or aluminum. Pole clearance spacing can be specified by the customer.
9. Operating rod: specify type and length of control rod, and insulated section, if required (see selection guide).
10. The gang operated sidebreak style switch shall be capable of seamless automation with a reciprocating motor operator. It shall be available with the motorized switch operator replacing the manual handle.
11. Switch phases shall be completely factory assembled. The switch configuration shall be either fully factory unitized and adjusted, or be modularized including factory assembled phase units for easy field assembly.
12. Crossarms shall have pre-drilled galvanized locating/mounting holes as prescribed by customer specified phase spacings.
13. Meets or Exceeds All Applicable NEMA, IEEE, ANSI, and IEC Standards as applicable for 46 kV (48 kV max.) & 69 kV (72.5 kV max.) (system voltage).

Switch Ratings:

Voltage Class: 46 kV (48 kV max.) & 69 kV (72.5 kV max.)

Current Class: 600, 900 and 1200 A continuous current per IEEE C37.32-1996

Momentary current:	600 A:	40,000 A-rms 10 cycles
		25,000 A-rms 3 seconds
	900 A:	51,000 A-rms 10 cycles
		32,000 A-rms 3 seconds
	1200 A:	70,000 A-rms 10 cycles
		44,000 A-rms 3 seconds

Loadbreak Device Ratings:

ArcWhip Loadbreak:

Voltage	Cable Charging	Line Charging
48.0 kV	15 A-rms	3500 kVA
72.5 kV	5 A-rms	3500 kVA

High Speed Whip Loadbreak:

Voltage	Cable Charging	Line Charging
48.0 kV	25 A-rms	70 MVA
72.5 kV	20 A-rms	70 MVA

INERTIA Engineering & Machine Works, Inc.
6665 Hardaway Road • Stockton, CA 95215
Tel: 800-791-9997 | Fax: 209-931-8186
E-mail: sales@inertiaworks.com

46 kV (48 kV) Single Phase Dimensions

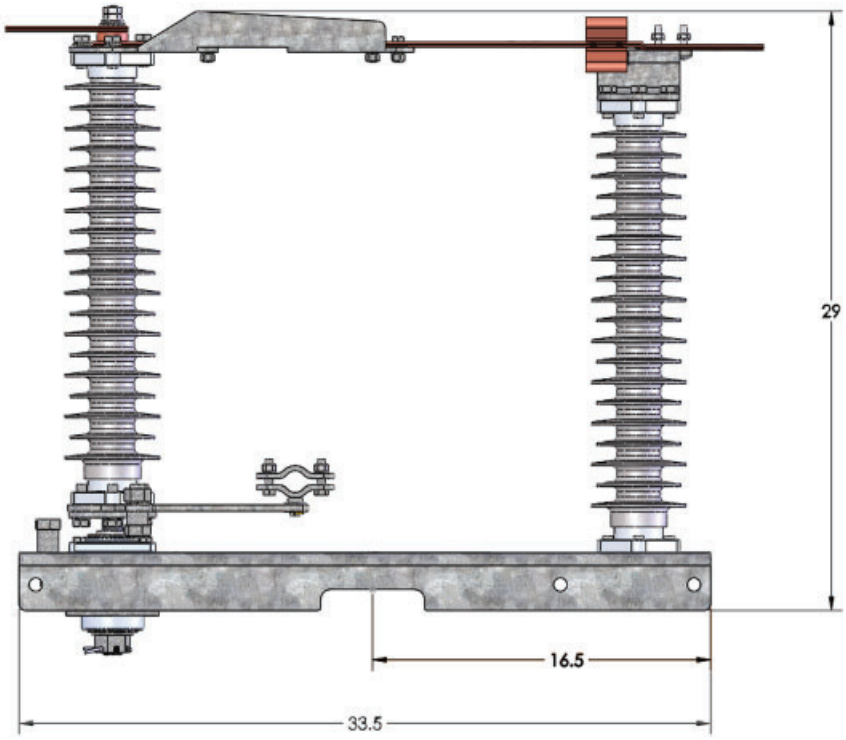

ALL LBS4 SERIES SWITCHES USE SEALED, STAINLESS STEEL BALL BEARINGS.

ALL CURRENT CARRYING COMPONENTS & CONTACT SILVER PLATED C110 COPPER .

ALL FERROUS COMPONENTS ARE HOT DIP GALVANIZED.

NO ALUMINUM OR COPPER CAST COMPONENTS USED.

INSULATORS: PORCELAIN OR SILICONE RUBBER: 250 kV B.I.L

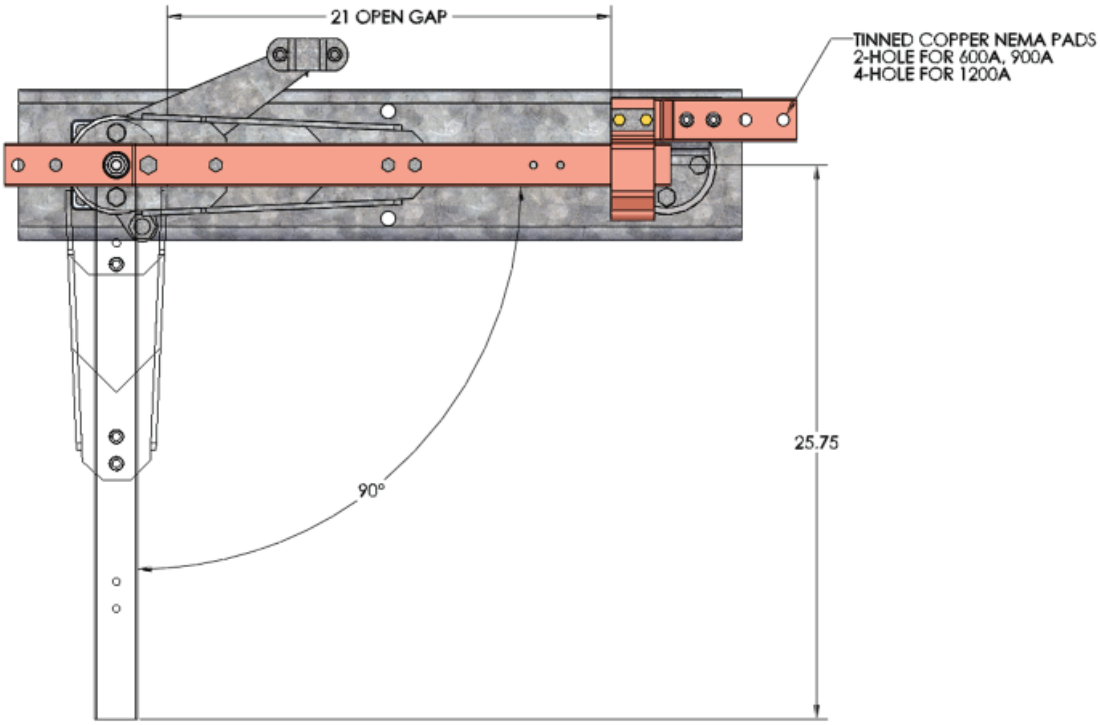

This drawing is for illustrative purposes only and therefore; may, or may not reflect the current revision of this drawing. Please request the current revision from the factory upon quote.

Materials:	N/A	Description: LBS4, 46 kV (48 kV) , Horizontal, Upright Dimensions
Finish:	HDG	
Scale:	NTS	Drawing No.: 9223M — Revision: 00
Drawn By:	N/A	
Date:	N/A	

inertia ENGINEERING

INERTIA Engineering & Machine Works, Inc.
6665 Hardaway Road • Stockton, CA 95215
Tel: 800-791-9997 | Fax: 209-931-8186
E-mail: sales@inertiaworks.com

46 kV (48 kV) Horizontal Upright Dimensions

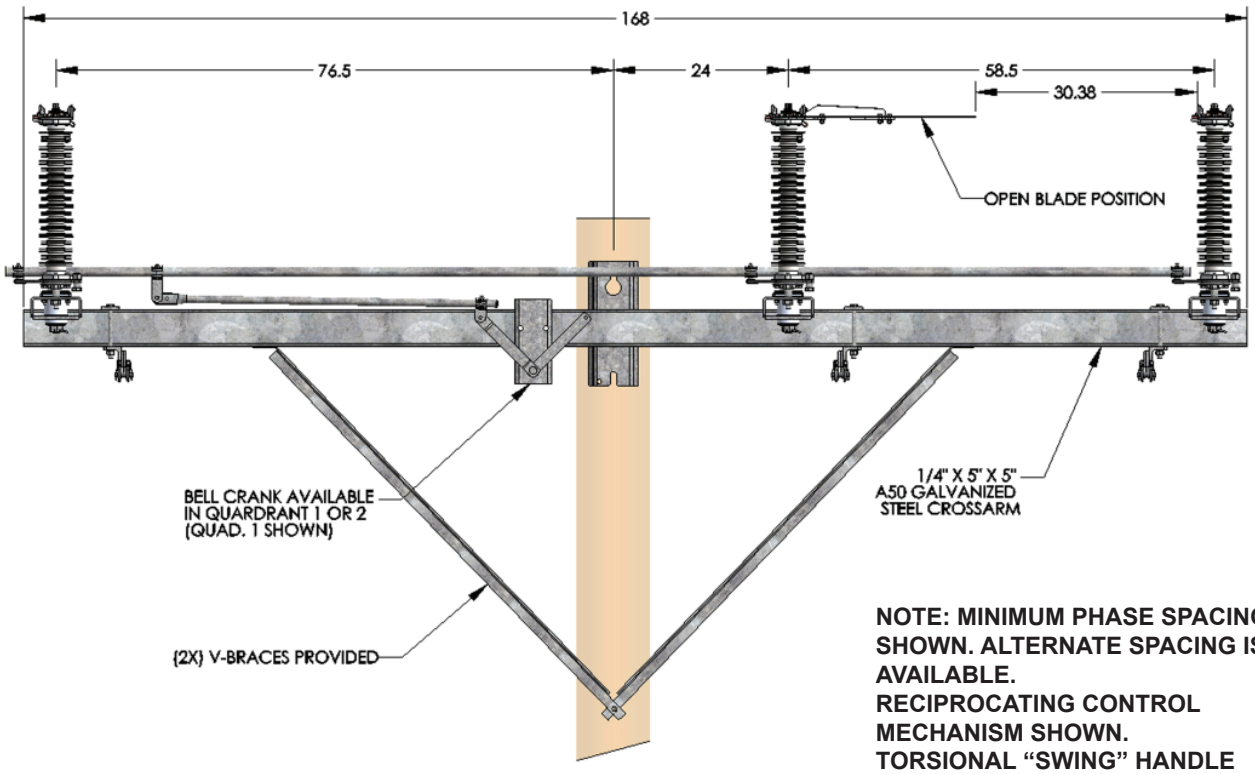

NOTE: MINIMUM PHASE SPACING SHOWN. ALTERNATE SPACING IS AVAILABLE.
RECIPROCATING CONTROL MECHANISM SHOWN.
TORSIONAL "SWING" HANDLE CONTROLS ARE AVAILABLE.

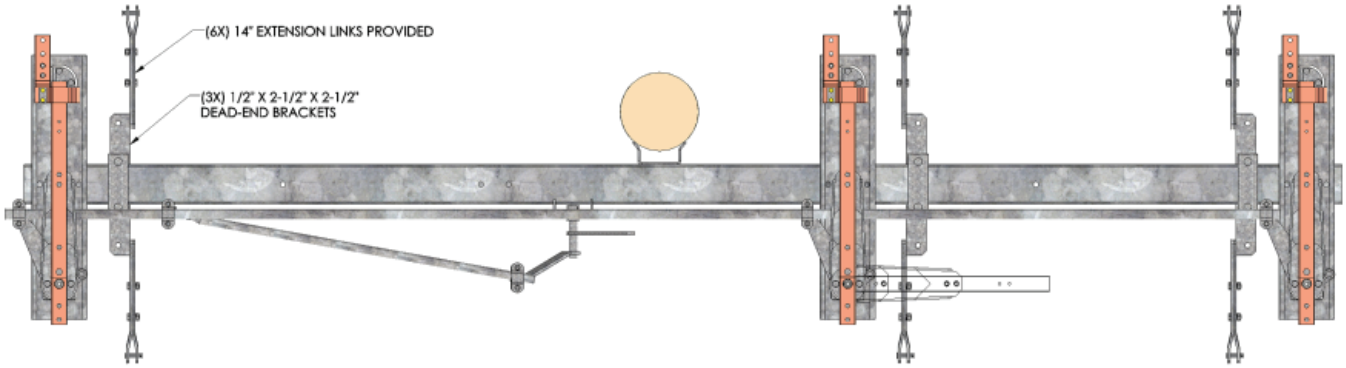

This drawing is for illustrative purposes only and therefore; may, or may not reflect the current revision of this drawing. Please request the current revision from the factory upon quote.

Materials:	N/A	Description: LBS, 46 kV (48 kV), Horizontal, Upright Dimensions	
Finish:	HDG		
Scale:	NTS	Drawing No.: 9232M	Revision: 00
Drawn By:	N/A		
Date:	N/A		

INERTIA Engineering & Machine Works, Inc.
6665 Hardaway Road • Stockton, CA 95215
Tel: 800-791-9997 | Fax: 209-931-8186
E-mail: sales@inertiaworks.com

46 kV (48 kV) Horizontal Upright Dimensions

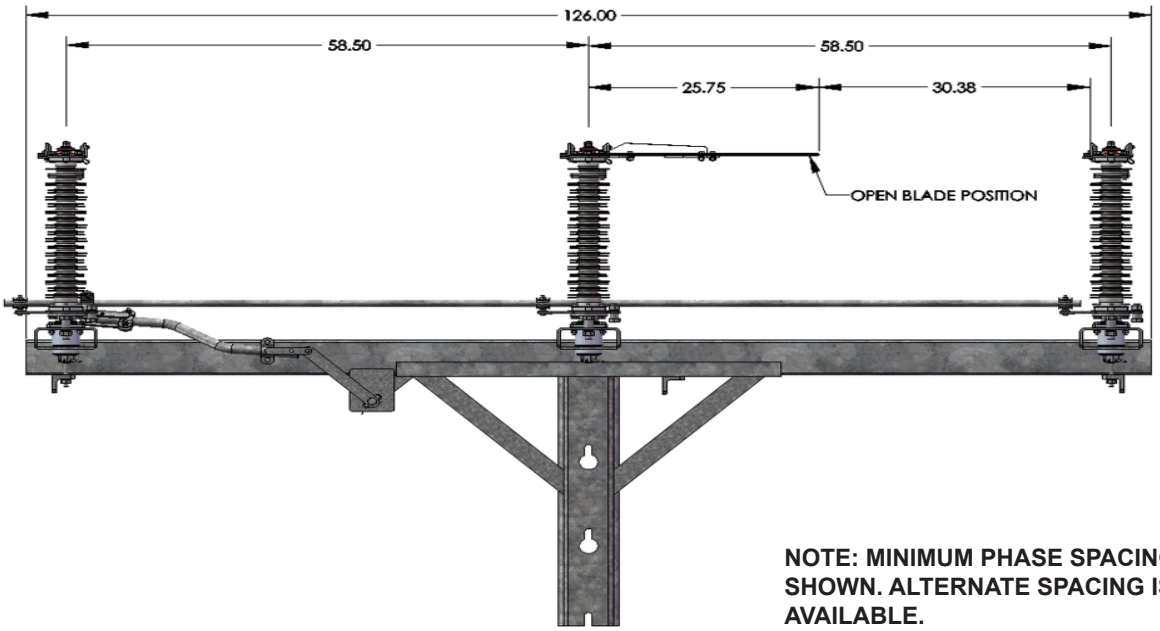

NOTE: MINIMUM PHASE SPACING SHOWN. ALTERNATE SPACING IS AVAILABLE.
RECIPROCATING CONTROL MECHANISM SHOWN.
TORSIONAL "SWING" HANDLE CONTROLS ARE AVAILABLE.

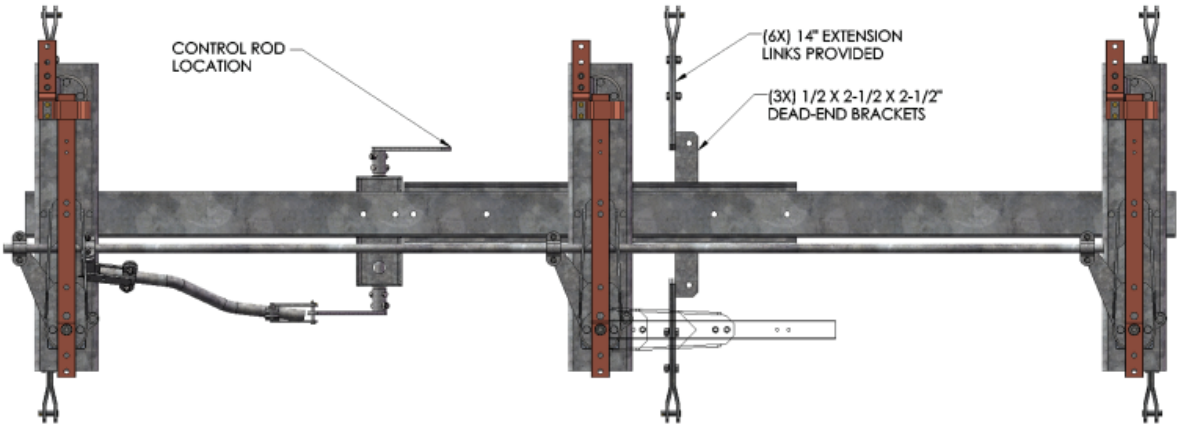

This drawing is for illustrative purposes only and therefore; may, or may not reflect the current revision of this drawing. Please request the current revision from the factory upon quote.

Materials:	N/A	Description: LBS, 46 kV (48 kV), Horizontal (center mount), Dimensions	
Finish:	HDG		
Scale:	NTS	Drawing No.: 9222M	Revision: 00
Drawn By:	N/A		
Date:	N/A		

INERTIA Engineering & Machine Works, Inc.
6665 Hardaway Road • Stockton, CA 95215
Tel: 800-791-9997 | Fax: 209-931-8186
E-mail: sales@inertiaworks.com

46 kV (48 kV) Horizontal Upright Dimensions

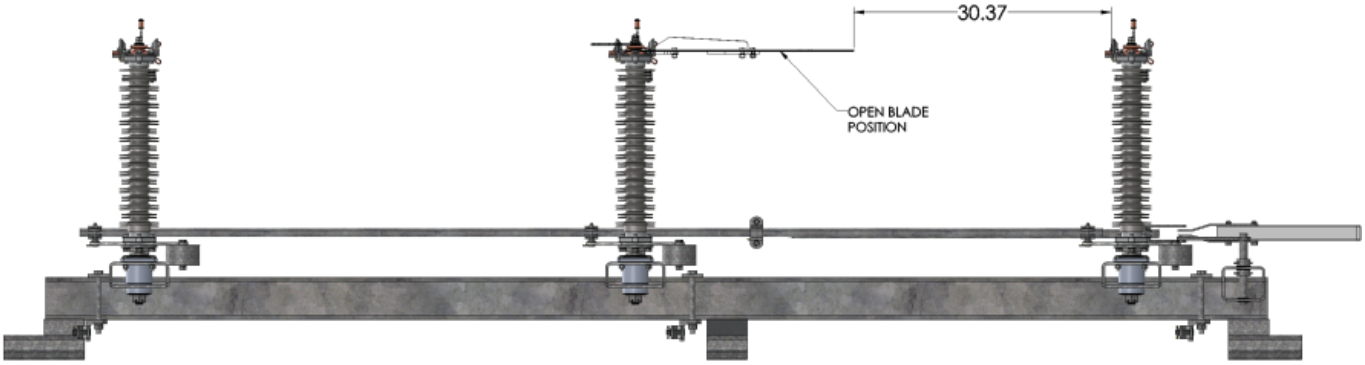

NOTE: MINIMUM PHASE SPACING SHOWN. ALTERNATE SPACING IS AVAILABLE.
PHASE OVER PHASE (VERTICAL) SWITCHES ARE AVAILABLE WITH RECIPROCATING (⇧⇩) CONTROL MECHANISMS ONLY.

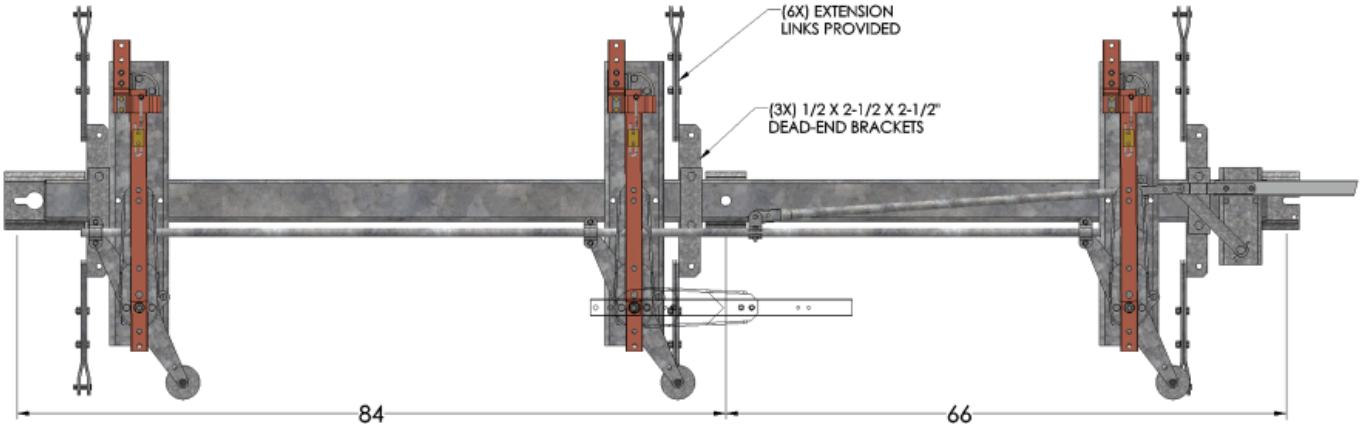

This drawing is for illustrative purposes only and therefore; may, or may not reflect the current revision of this drawing. Please request the current revision from the factory upon quote.

Materials:	N/A	Description: LBS, 46 kV (48 kV), Vertical (Phase over Phase), Dimensions
Finish:	N/A	
Scale:	NTS	Drawing No.: 9224M — Revision: 00
Drawn By:	YU	
Date:	12/14/16	

INERTIA Engineering & Machine Works, Inc.
6665 Hardaway Road • Stockton, CA 95215
Tel: 800-791-9997 | Fax: 209-931-8186
E-mail: sales@inertiaworks.com

46 kV (48 kV) - 69 kV (72.5 kV) Tap Switch Dimensions

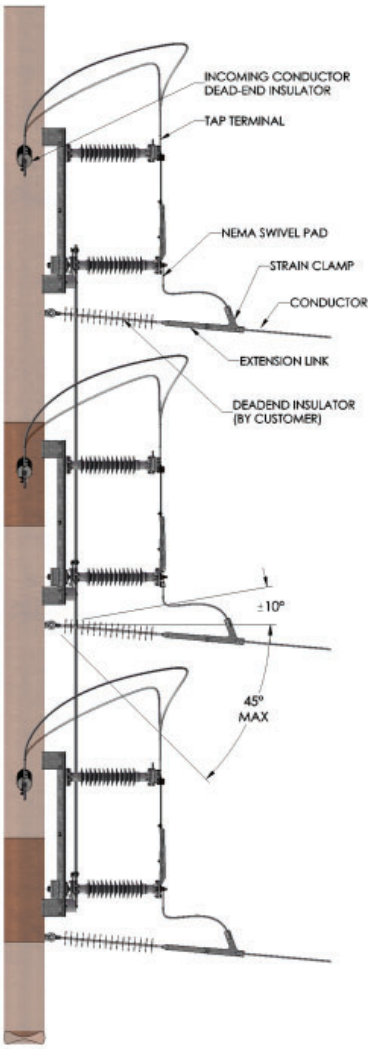

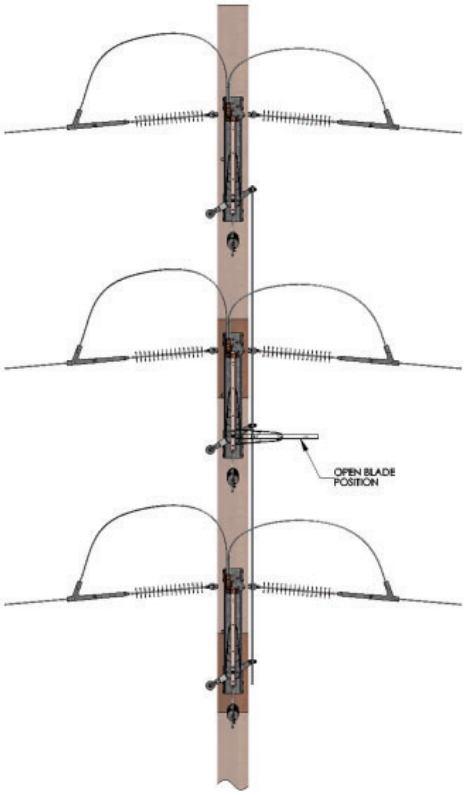

THE VERTICALLY MOUNTED TAP SWITCH IS A GANG OPERATED POLE MOUNTED SWITCH WHICH CAN BE USED IN VARIOUS CONSTRUCTION APPLICATIONS. RIGHT HAND (SHOWN) AND LEFT HAND OPERATING MODELS ARE ADAPTABLE TO EXTREME HORIZONTAL AND VERTICAL LINE ANGLES. TIN PLATED COPPER BUSS "TEES" AND BOLTED CONDUCTOR CLAMPS ARE AVAILABLE FOR CONNECTING TWO, THREE, AND FOUR-WAY SWITCH CONFIGURATIONS.

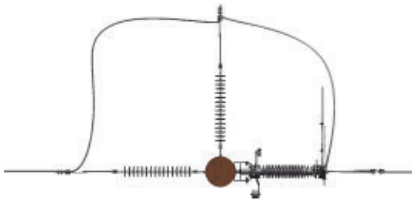

ONE WAY IN-LINE

NOTE: MINIMUM PHASE SPACING SHOWN. ALTERNATE SPACING IS AVAILABLE.
RECIPROCATING CONTROL MECHANISM SHOWN.
TORSIONAL "SWING" HANDLE CONTROLS ARE AVAILABLE.

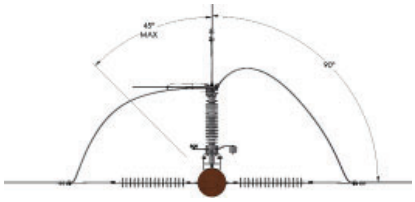

ONE WAY 90°

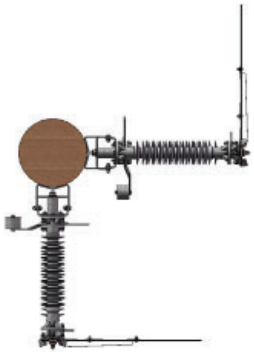

TWO WAY

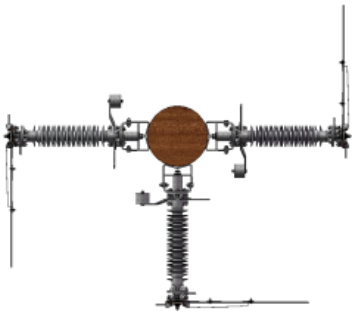

THREE WAY

THREE WAY 120°

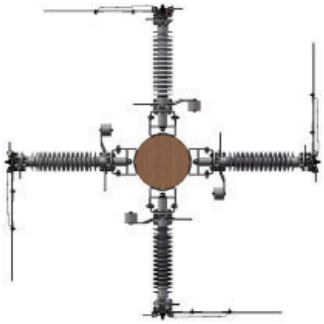

FOUR WAY

This drawing is for illustrative purposes only and therefore; may, or may not reflect the current revision of this drawing. Please request the current revision from the factory upon quote.

Materials:	N/A	Description: LBS, 46 kV (48 kV) - 69 kV (72.5 kV), Tap Switch Dimensions
Finish:	N/A	
Scale:	NTS	Drawing No.: 9237M — Revision: 00
Drawn By:	N/A	
Date:	N/A	

inertia ENGINEERING

INERTIA Engineering & Machine Works, Inc.
6665 Hardaway Road • Stockton, CA 95215
Tel: 800-791-9997 | Fax: 209-931-8186
E-mail: sales@inertiaworks.com

46 kV (48 kV) Triangular (Pole Top) Dimensions

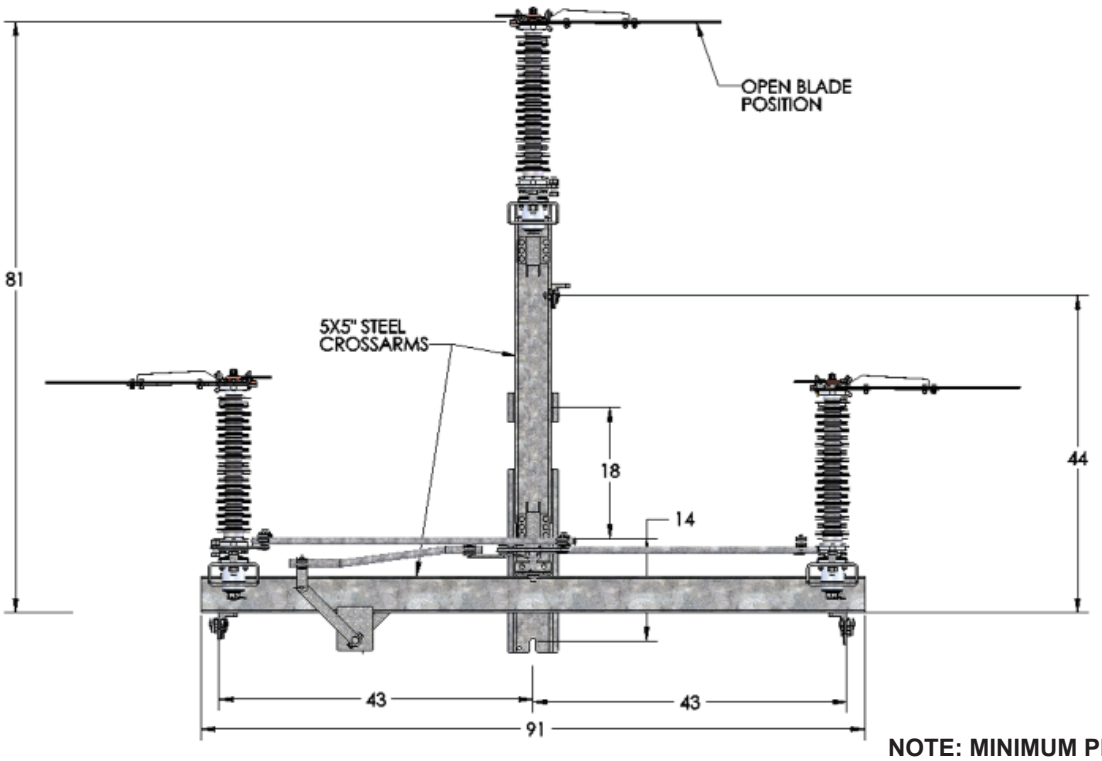

NOTE: MINIMUM PHASE SPACING SHOWN. ALTERNATE SPACING IS AVAILABLE. RECIPROCATING CONTROL MECHANISM SHOWN. TORSIONAL "SWING" HANDLE CONTROLS ARE AVAILABLE.

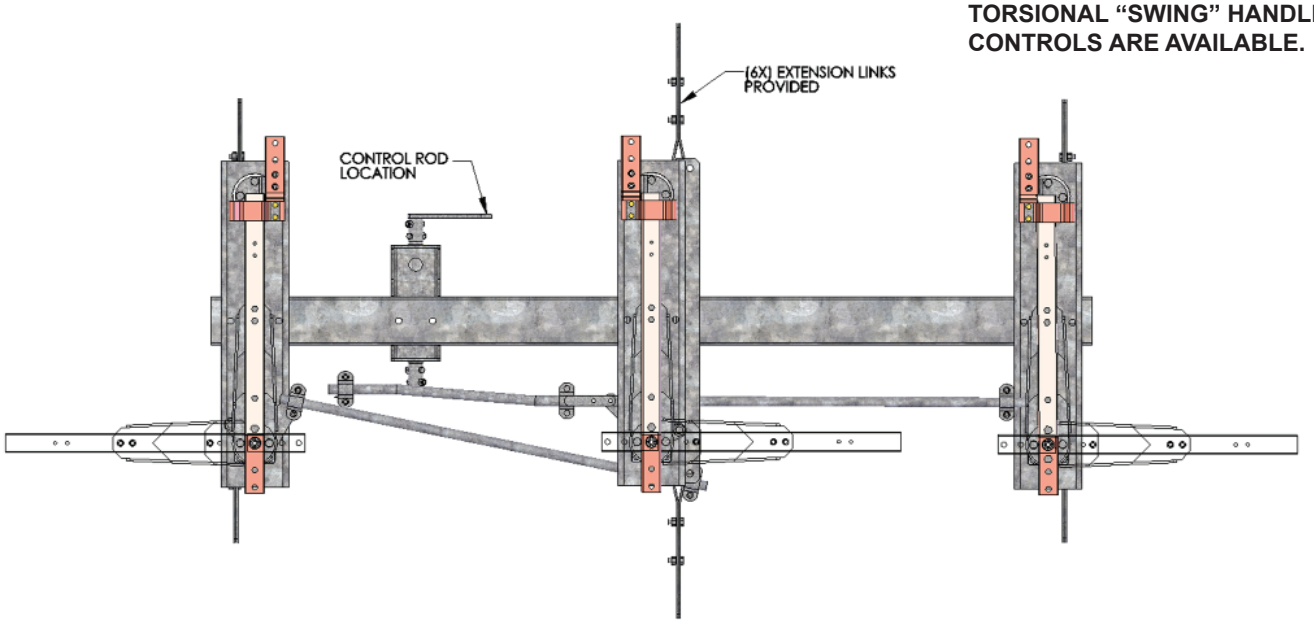

This drawing is for illustrative purposes only and therefore; may, or may not reflect the current revision of this drawing. Please request the current revision from the factory upon quote.

Materials:	N/A	Description: LBS, 46 kV (48 kV), TRIANGULAR (pole top) Dimensions	
Finish:	N/A		
Scale:	NTS	Drawing No.: 9403M	Revision: 00
Drawn By:	N/A		
Date:	N/A		

INERTIA Engineering & Machine Works, Inc.
6665 Hardaway Road • Stockton, CA 95215
Tel: 800-791-9997 | Fax: 209-931-8186
E-mail: sales@inertiaworks.com

46 kV (48 kV) Riser Substation H-Frame Dimensions

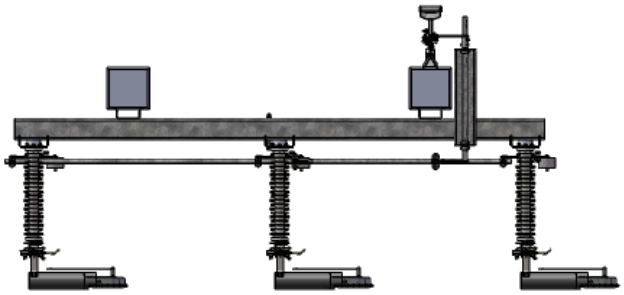

MINIMUM PHASE SPACING

Nominal Voltage Rating	
DIM:	48 kV
A	58.5”

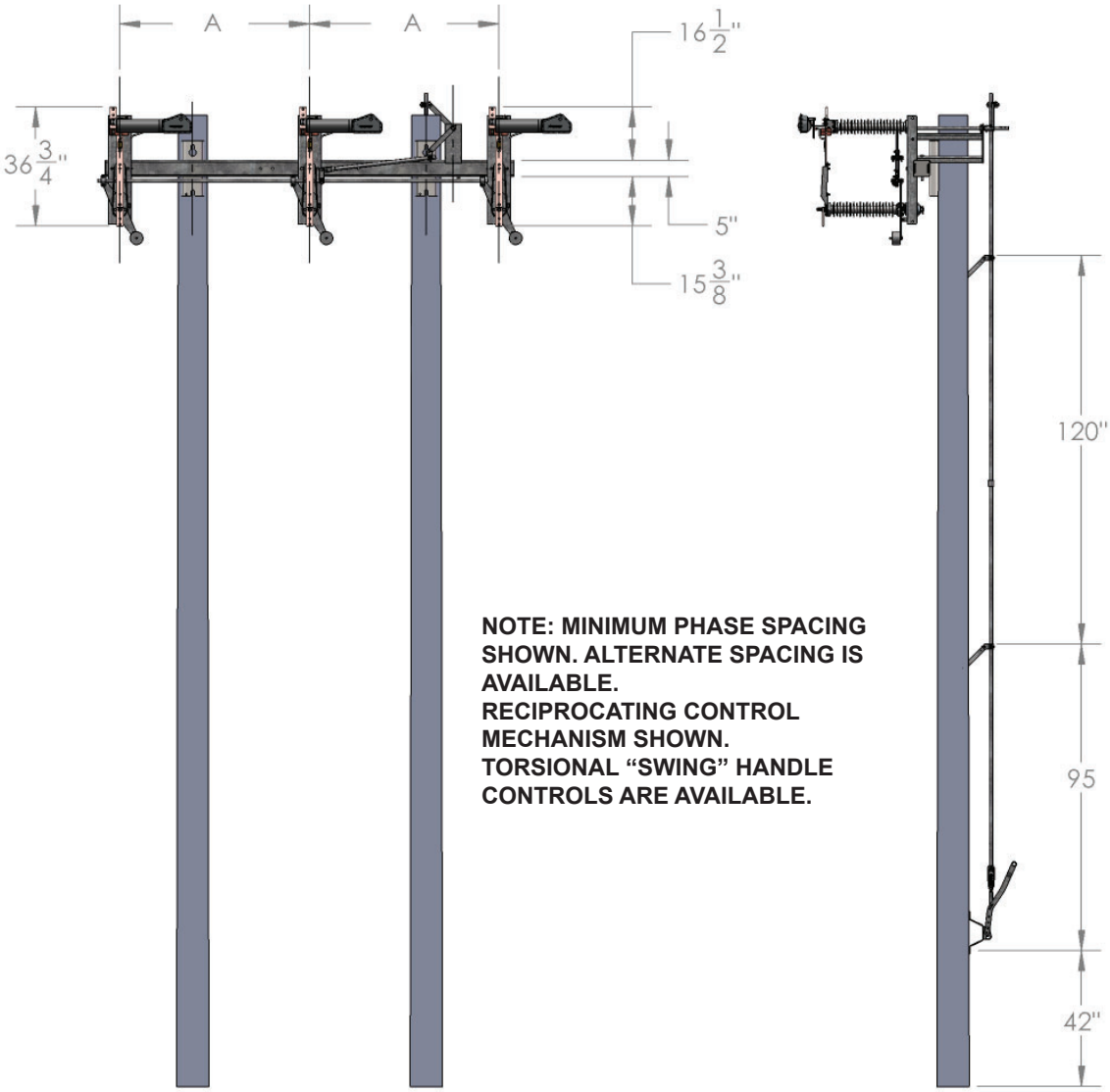

NOTE: MINIMUM PHASE SPACING SHOWN. ALTERNATE SPACING IS AVAILABLE.
RECIPROCATING CONTROL MECHANISM SHOWN.
TORSIONAL “SWING” HANDLE CONTROLS ARE AVAILABLE.

This drawing is for illustrative purposes only and therefore; may, or may not reflect the current revision of this drawing. Please request the current revision from the factory upon quote.

Materials:	N/A	Description: LBS4, 46 kV (48 kV), RISER Substation H-Frame Mounted, Switch Dimensions
Finish:	HDG	
Scale:	NTS	Drawing No.: 9661-31M — Revision: 00
Drawn By:	JN	
Date:	N/A	

INERTIA Engineering & Machine Works, Inc.
6665 Hardaway Road • Stockton, CA 95215
Tel: 800-791-9997 | Fax: 209-931-8186
E-mail: sales@inertiaworks.com

69 kV (72.5 kV) Single Phase Dimensions

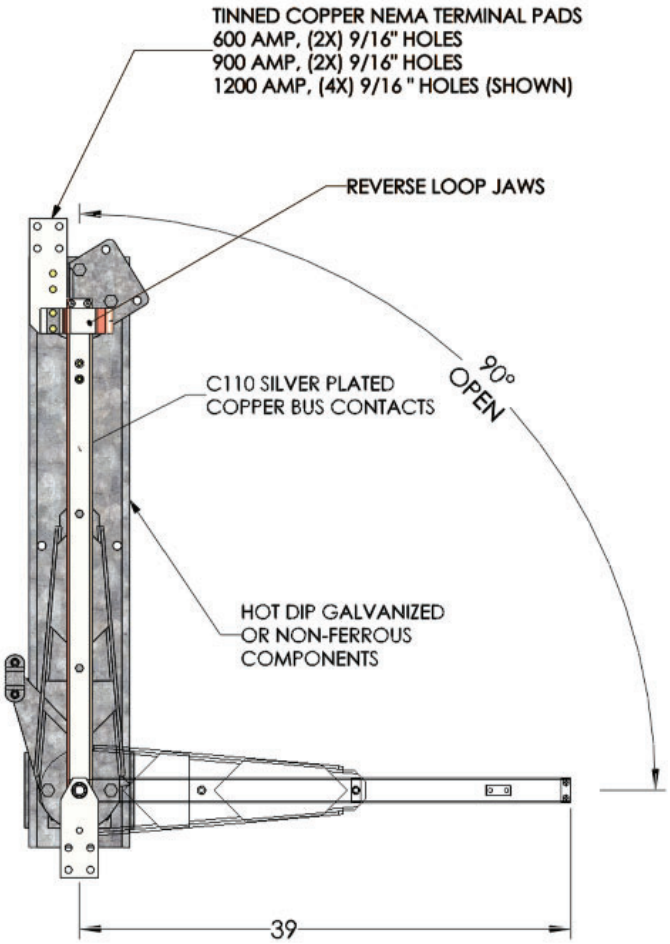

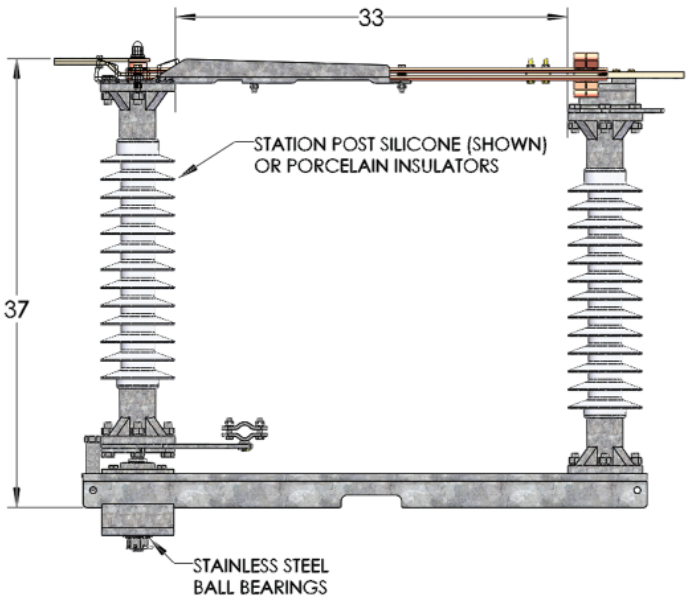

NOTE: MINIMUM PHASE SPACING SHOWN. ALTERNATE SPACING IS AVAILABLE.
RECIPROCATING CONTROL MECHANISM SHOWN.
TORSIONAL "SWING" HANDLE CONTROLS ARE AVAILABLE.

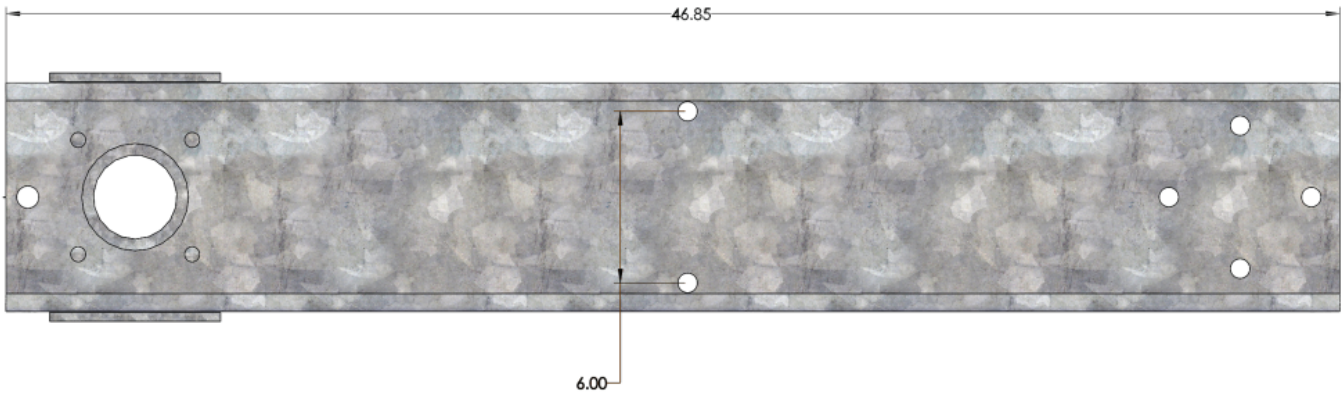

This drawing is for illustrative purposes only and therefore; may, or may not reflect the current revision of this drawing. Please request the current revision from the factory upon quote.

Materials:	N/A	Description: LBS6 69 kV (72.5 kV) Single Phase Unit, Dimensions	
Finish:	N/A		
Scale:	NTS	Drawing No.: 7000M	Revision: 00
Drawn By:	YU		
Date:	12/19/16		

INERTIA Engineering & Machine Works, Inc.
6665 Hardaway Road • Stockton, CA 95215
Tel: 800-791-9997 | Fax: 209-931-8186
E-mail: sales@inertiaworks.com

69 kV (72.5 kV) Horizontal Pole Top Dimensions

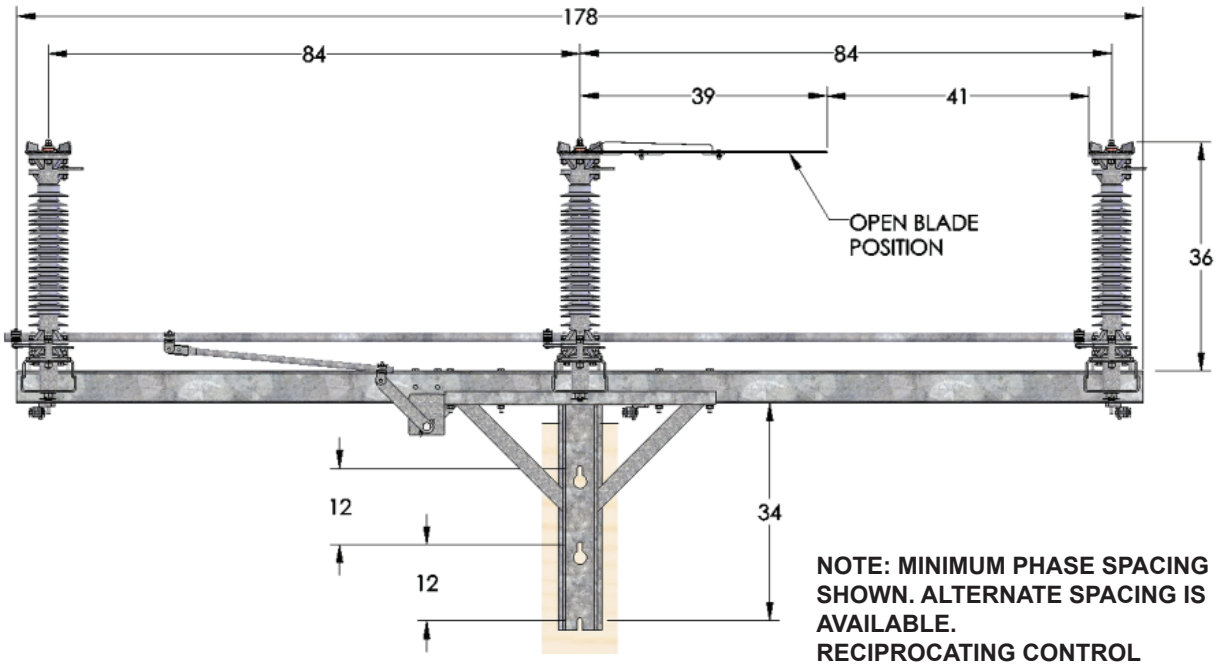

NOTE: MINIMUM PHASE SPACING SHOWN. ALTERNATE SPACING IS AVAILABLE.
RECIPROCATING CONTROL MECHANISM SHOWN.
TORSIONAL "SWING" HANDLE CONTROLS ARE AVAILABLE.

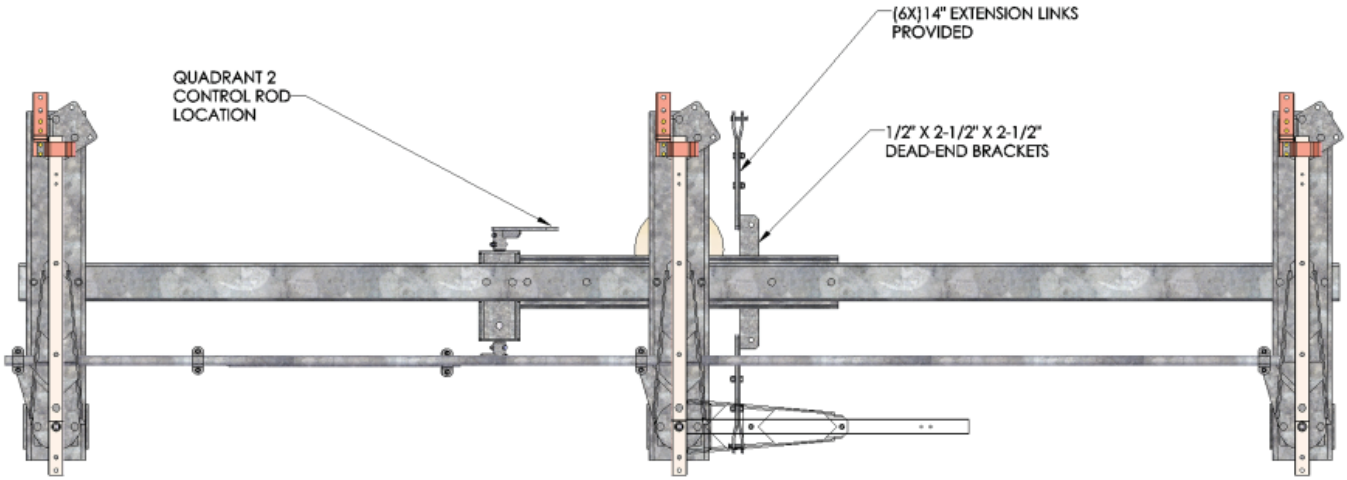

This drawing is for illustrative purposes only and therefore; may, or may not reflect the current revision of this drawing. Please request the current revision from the factory upon quote.

Materials:	N/A	Description: LBS6, 69 kV (72.5 kV), Horizontal (pole top), Dimensions
Finish:	N/A	
Scale:	NTS	Drawing No.: 9215M — Revision: 00
Drawn By:	Y.X.	
Date:	N/A	

INERTIA Engineering & Machine Works, Inc.
6665 Hardaway Road • Stockton, CA 95215
Tel: 800-791-9997 | Fax: 209-931-8186
E-mail: sales@inertiaworks.com

69 kV (72.5 kV) Vertical Phase Over Phase Dimensions

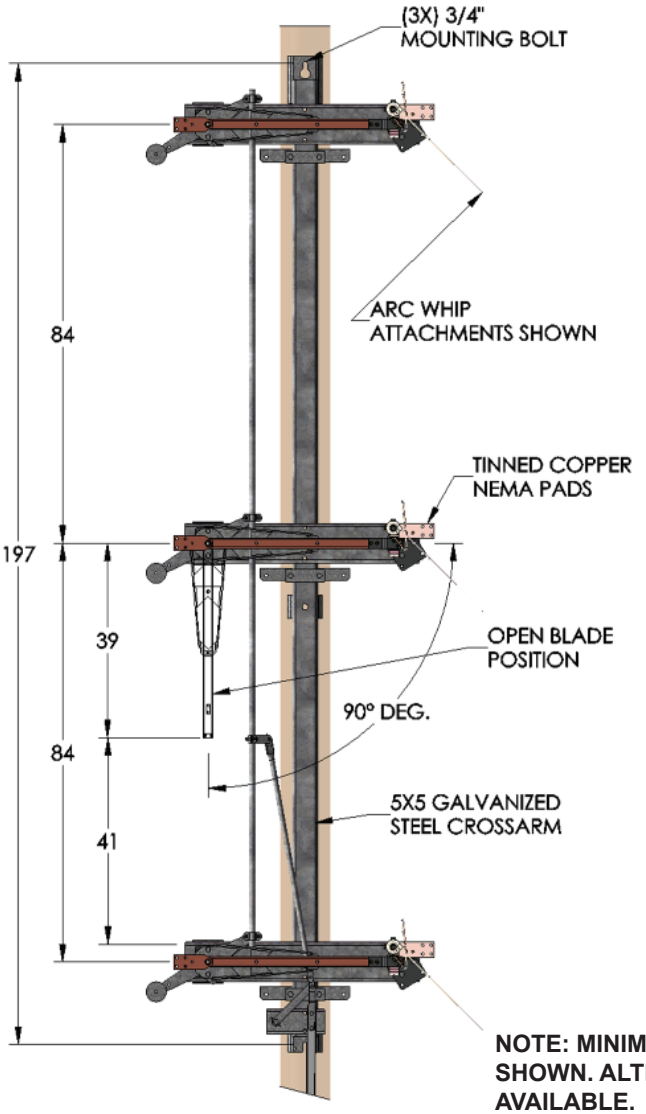

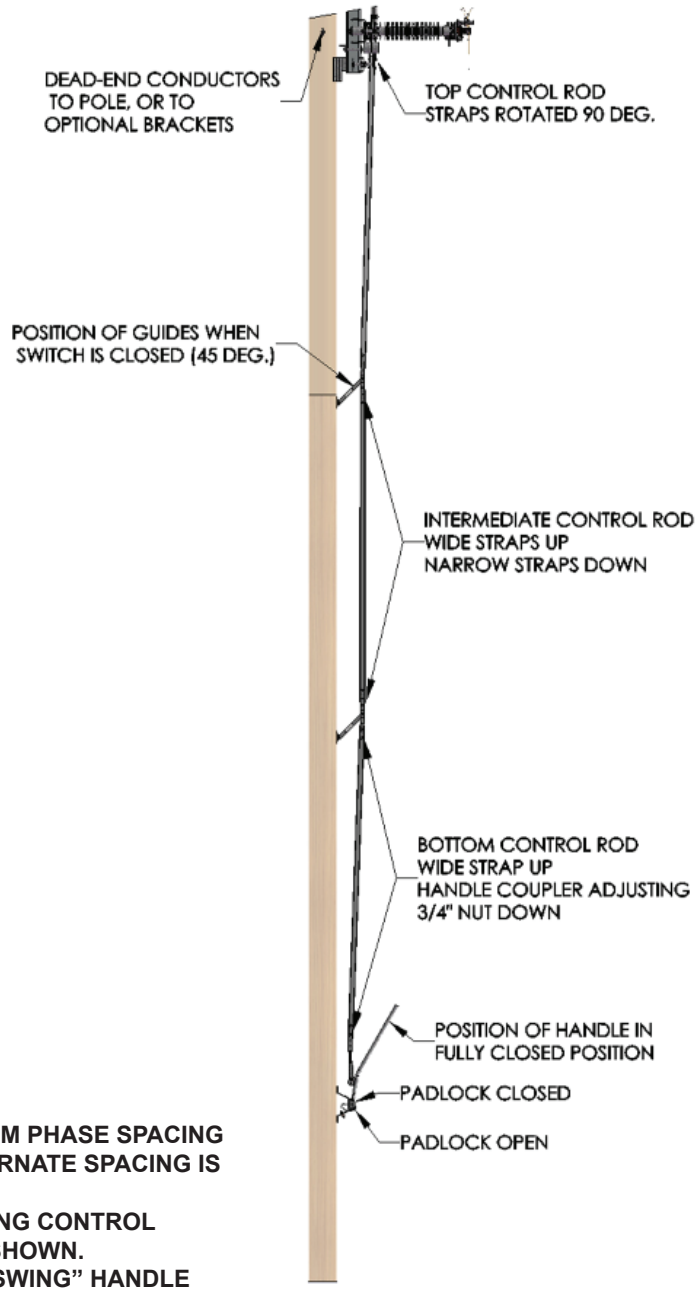

NOTE: MINIMUM PHASE SPACING SHOWN. ALTERNATE SPACING IS AVAILABLE.
RECIPROCATING CONTROL MECHANISM SHOWN.
TORSIONAL "SWING" HANDLE CONTROLS ARE AVAILABLE.

This drawing is for illustrative purposes only and therefore; may, or may not reflect the current revision of this drawing. Please request the current revision from the factory upon quote.

Materials:	N/A	Description: LBS6, 69 kV (72.5 kV), Vertical (Phase over phase), Dimensions	
Finish:	N/A		
Scale:	NTS	Drawing No.: 9210M	Revision: 00
Drawn By:	Y.X.		
Date:	N/A		

INERTIA Engineering & Machine Works, Inc.
6665 Hardaway Road • Stockton, CA 95215
Tel: 800-791-9997 | Fax: 209-931-8186
E-mail: sales@inertiaworks.com

69 kV (72.5 kV) Vertical Phase Over Phase Twin Circuit Dimensions

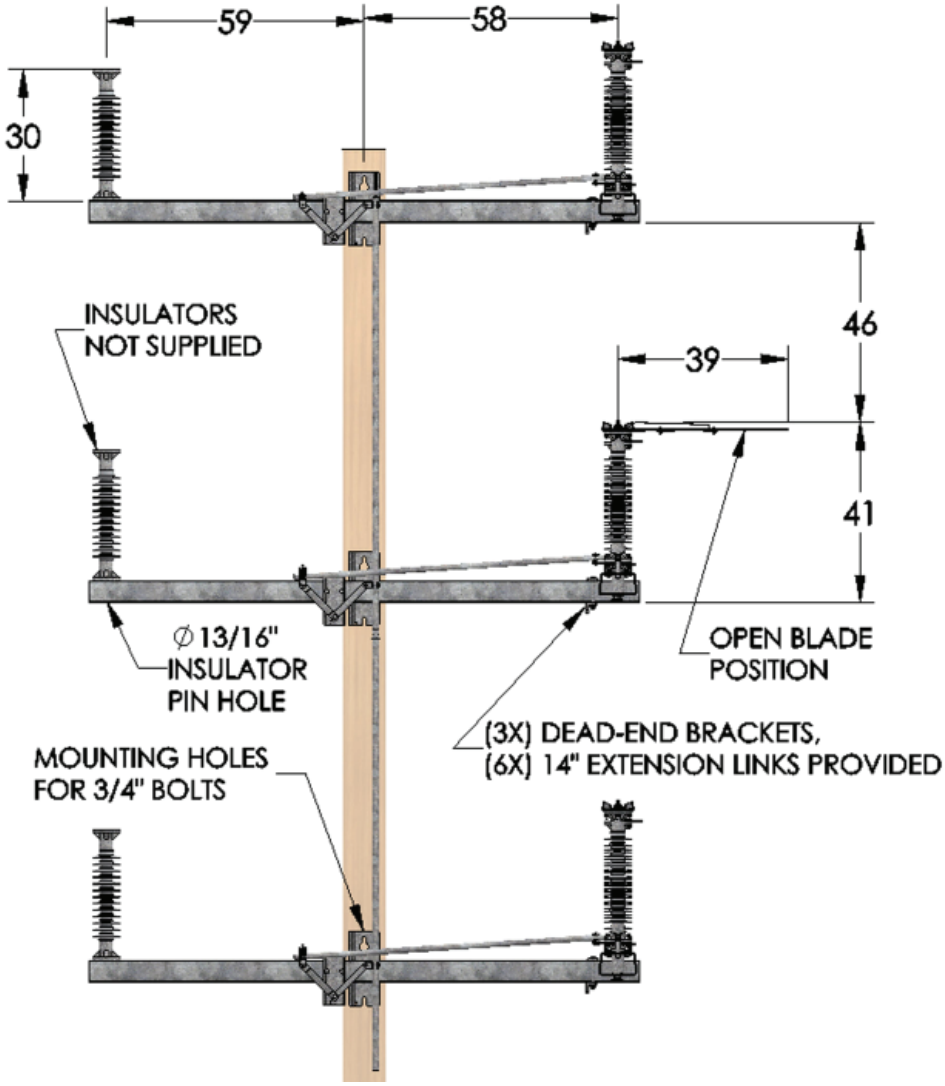

NOTE: MINIMUM PHASE SPACING SHOWN. ALTERNATE SPACING IS AVAILABLE.
RECIPROCATING CONTROL MECHANISM SHOWN.
TORSIONAL "SWING" HANDLE CONTROLS ARE AVAILABLE.

This drawing is for illustrative purposes only and therefore; may, or may not reflect the current revision of this drawing. Please request the current revision from the factory upon quote.

Materials:	N/A	Description: LBS6, 69 kV (72.5 kV), Vertical (Phase over phase), Twin Circuit Dimensions	
Finish:	N/A		
Scale:	NTS		
Drawn By:	N/A	Drawing No.: 9212M	Revision: 00
Date:	N/A		

INERTIA Engineering & Machine Works, Inc.
6665 Hardaway Road • Stockton, CA 95215
Tel: 800-791-9997 | Fax: 209-931-8186
E-mail: sales@inertiaworks.com

69 kV (72.5 kV) Delta (Triangular) Dimensions

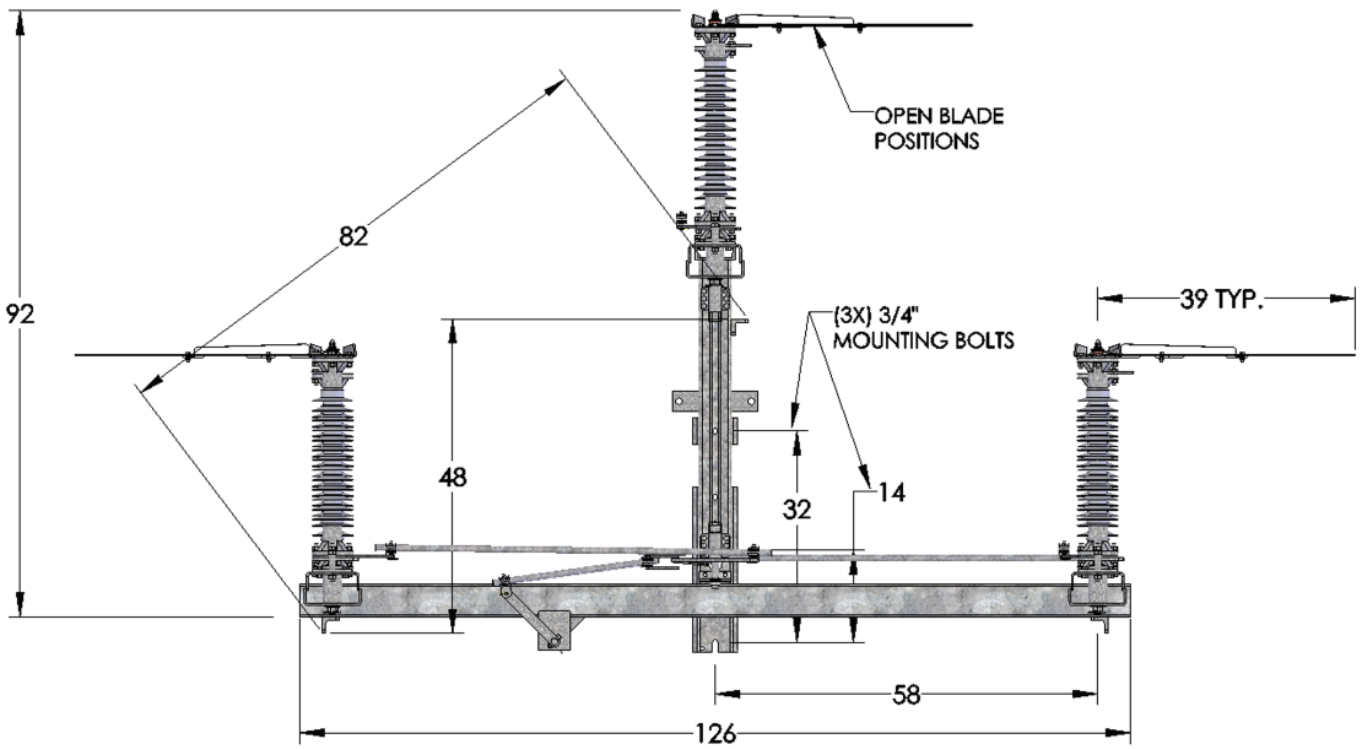

NOTE: MINIMUM PHASE SPACING SHOWN. ALTERNATE SPACING IS AVAILABLE.
RECIPROCATING CONTROL MECHANISM SHOWN.
TORSIONAL "SWING" HANDLE CONTROLS ARE AVAILABLE.

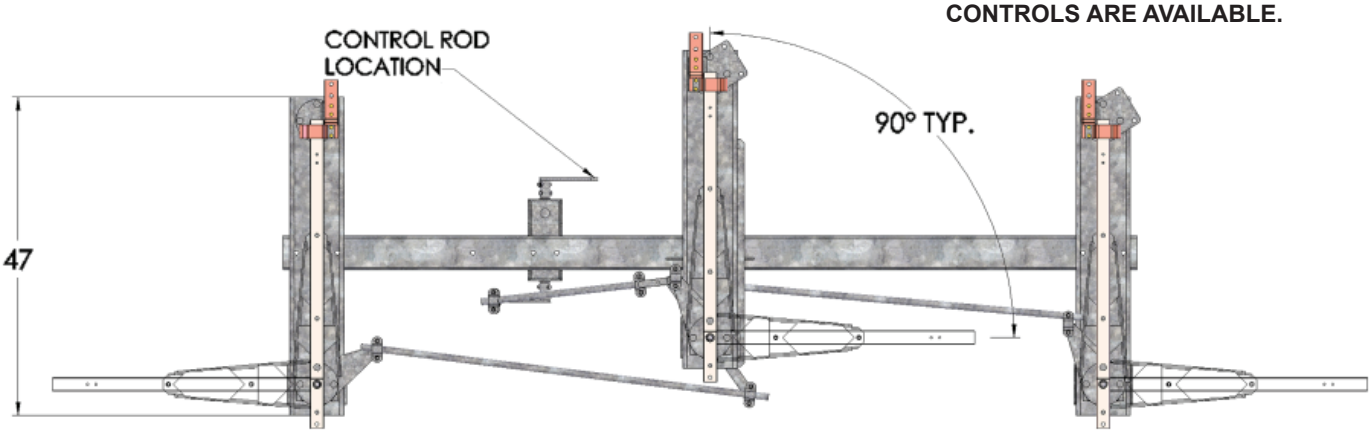

This drawing is for illustrative purposes only and therefore; may, or may not reflect the current revision of this drawing. Please request the current revision from the factory upon quote.

Materials:	N/A	Description: LBS6, 69 kV (72.5 kV), Delta (Triangular), Dimensions	
Finish:	N/A		
Scale:	NTS	Drawing No.: 9221M	Revision: 00
Drawn By:	N/A		
Date:	N/A		

INERTIA Engineering & Machine Works, Inc.
6665 Hardaway Road • Stockton, CA 95215
Tel: 800-791-9997 | Fax: 209-931-8186
E-mail: sales@inertiaworks.com

69 kV (72.5 kV) Vertical (Tiered Outboard) Dimensions

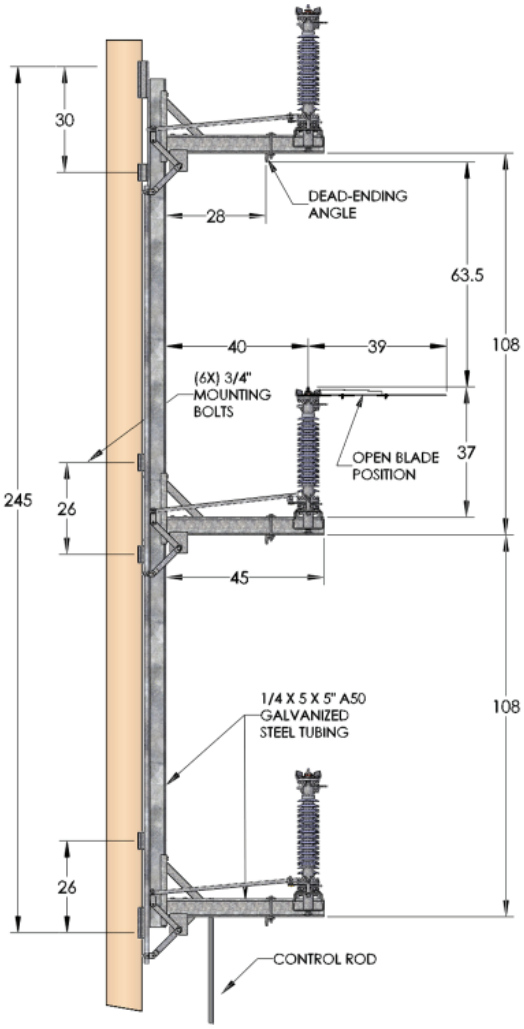

NOTE: MINIMUM PHASE SPACING SHOWN. ALTERNATE SPACING IS AVAILABLE.
RECIPROCATING CONTROL MECHANISM SHOWN.
TORSIONAL "SWING" HANDLE CONTROLS ARE AVAILABLE.

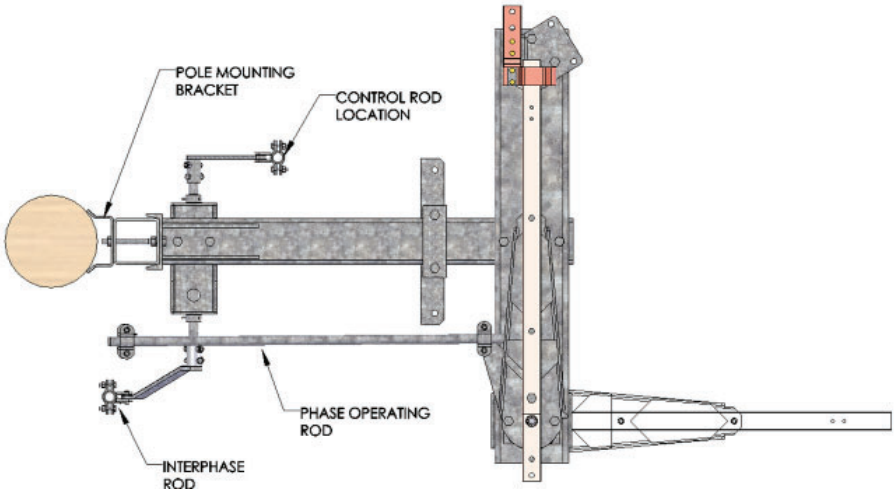

This drawing is for illustrative purposes only and therefore; may, or may not reflect the current revision of this drawing. Please request the current revision from the factory upon quote.

Materials:	N/A	Description: LBS6, 69 kV (72.5 kV), Vertical (Tiered Outboard), Dimensions	
Finish:	N/A		
Scale:	NTS	Drawing No.: 9370M	Revision: 00
Drawn By:	N/A		
Date:	N/A		

INERTIA Engineering & Machine Works, Inc.
6665 Hardaway Road • Stockton, CA 95215
Tel: 800-791-9997 | Fax: 209-931-8186
E-mail: sales@inertiaworks.com

69 kV (72.5 kV) Riser Dimensions

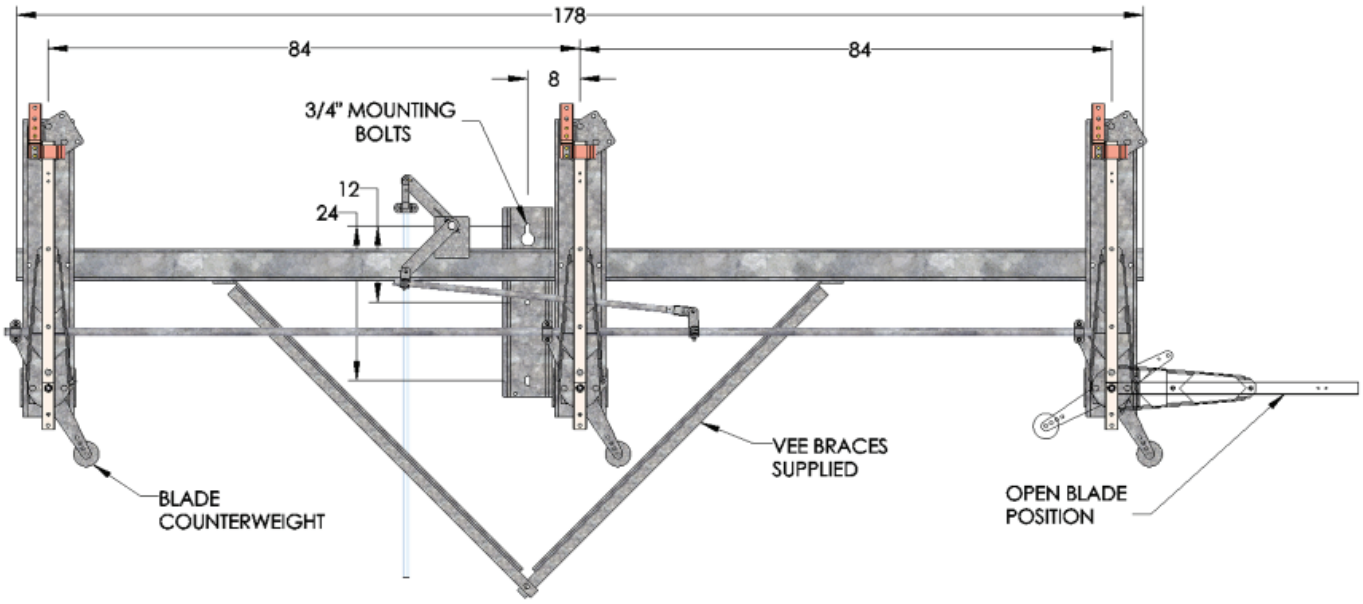

NOTE: MINIMUM PHASE SPACING SHOWN. ALTERNATE SPACING IS AVAILABLE.
RECIPROCATING CONTROL MECHANISM SHOWN.
TORSIONAL "SWING" HANDLE CONTROLS ARE AVAILABLE.

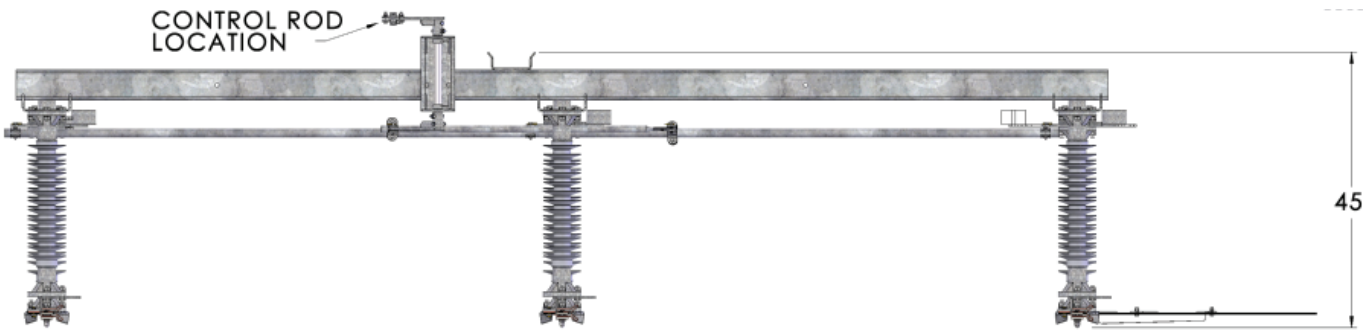

This drawing is for illustrative purposes only and therefore; may, or may not reflect the current revision of this drawing. Please request the current revision from the factory upon quote.

Materials:	N/A	Description: LBS6, 69 kV (72.5 kV), Riser Switch, Dimensions	
Finish:	HDG		
Scale:	NTS	Drawing No.: 9390M	Revision: 00
Drawn By:	N/A		
Date:	N/A		

INERTIA Engineering & Machine Works, Inc.
6665 Hardaway Road • Stockton, CA 95215
Tel: 800-791-9997 | Fax: 209-931-8186
E-mail: sales@inertiaworks.com

69 kV (72.5 kV) Vertical (Tiered Outboard) 2 Right 1 Left Dimensions

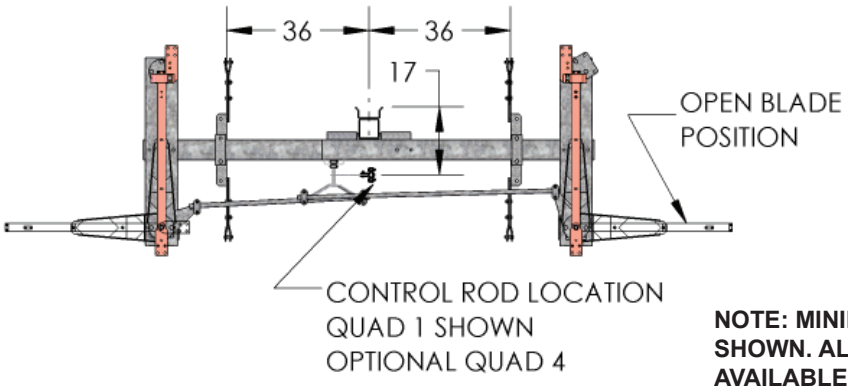

NOTE: MINIMUM PHASE SPACING SHOWN. ALTERNATE SPACING IS AVAILABLE.
RECIPROCATING CONTROL MECHANISM SHOWN.
TORSIONAL "SWING" HANDLE CONTROLS ARE AVAILABLE.

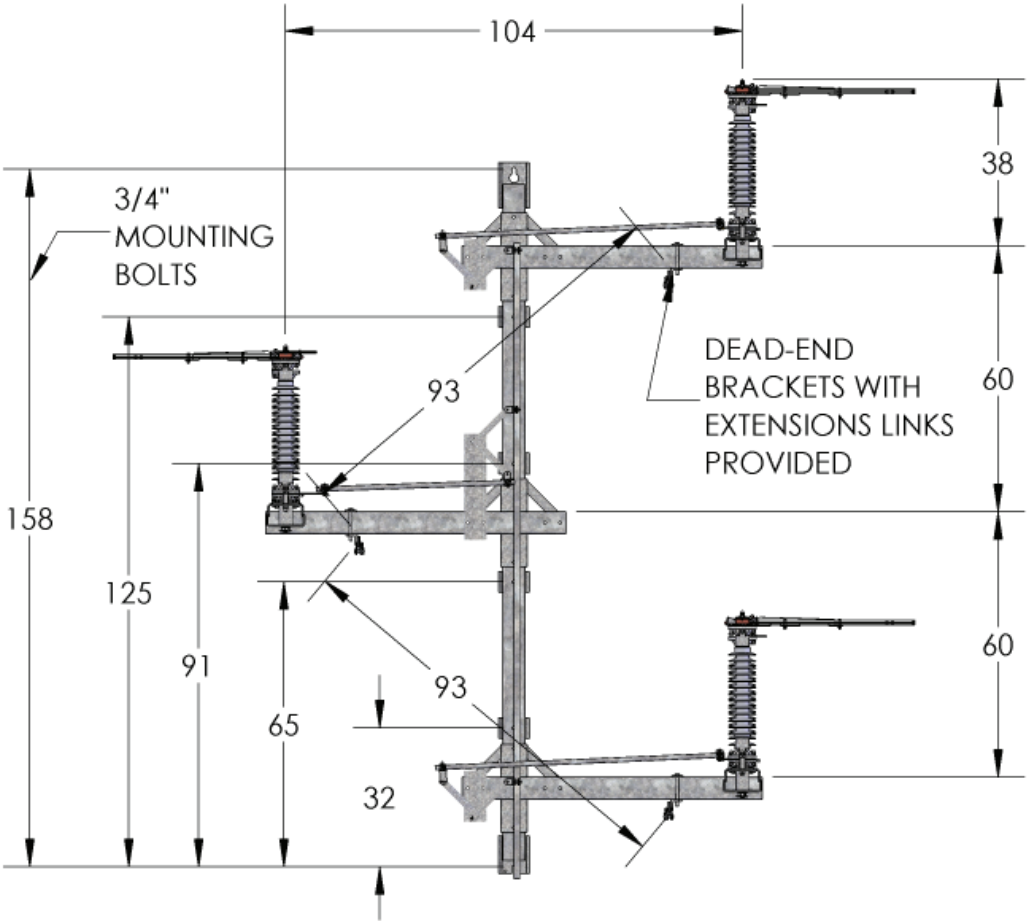

This drawing is for illustrative purposes only and therefore; may, or may not reflect the current revision of this drawing. Please request the current revision from the factory upon quote.

Materials:	N/A	Description: LBS6, 69 kV (72.5 kV), Vertical (Tiered Outboard), 2 Right 1 Left, Switch Dimensions	
Finish:	HDG		
Scale:	NTS	Drawing No.: 9515M	Revision: 00
Drawn By:	N/A		
Date:	N/A		

INERTIA Engineering & Machine Works, Inc.
6665 Hardaway Road • Stockton, CA 95215
Tel: 800-791-9997 | Fax: 209-931-8186
E-mail: sales@inertiaworks.com